kawaroa park squash club

Womens Div 1

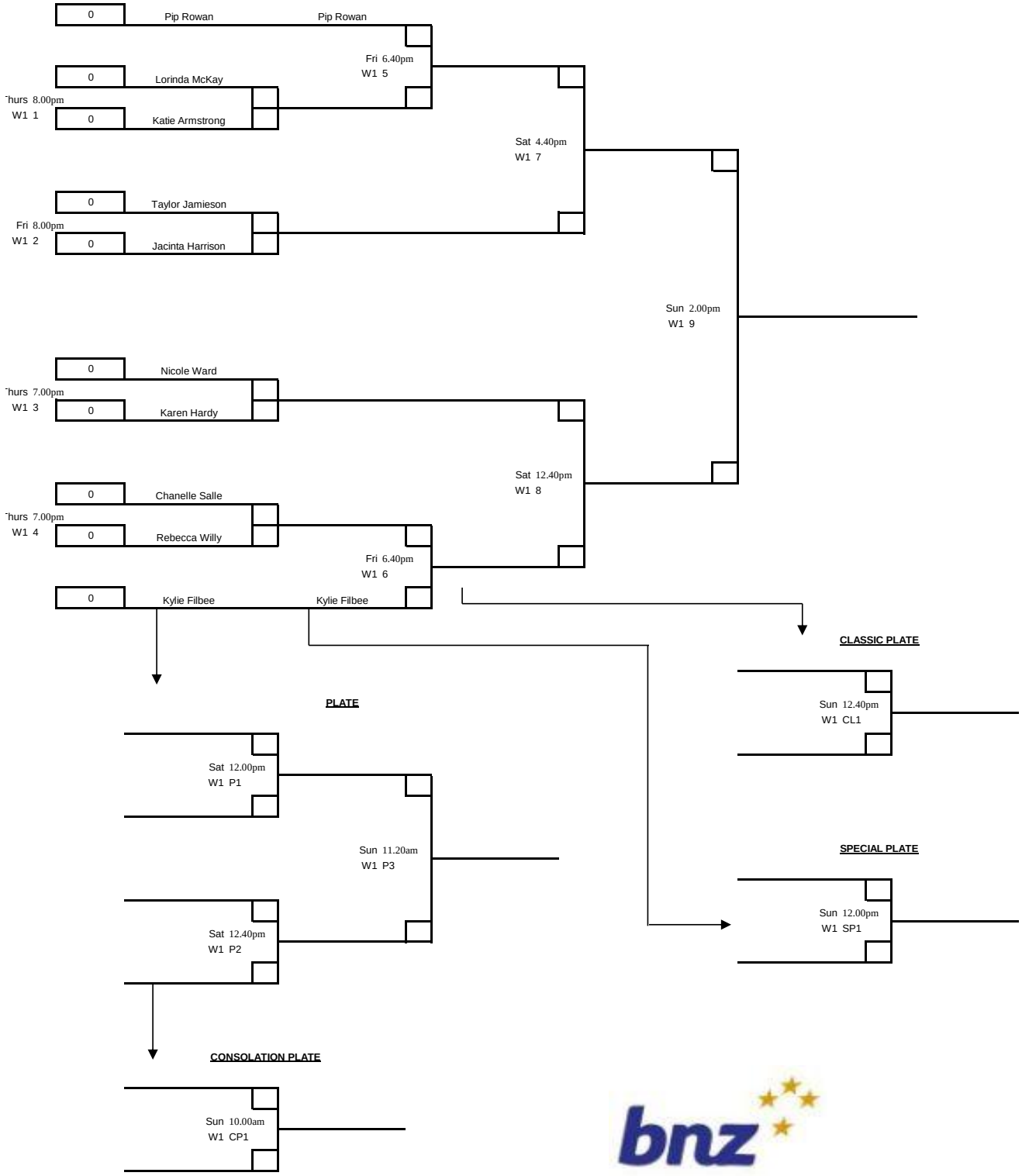

bnz